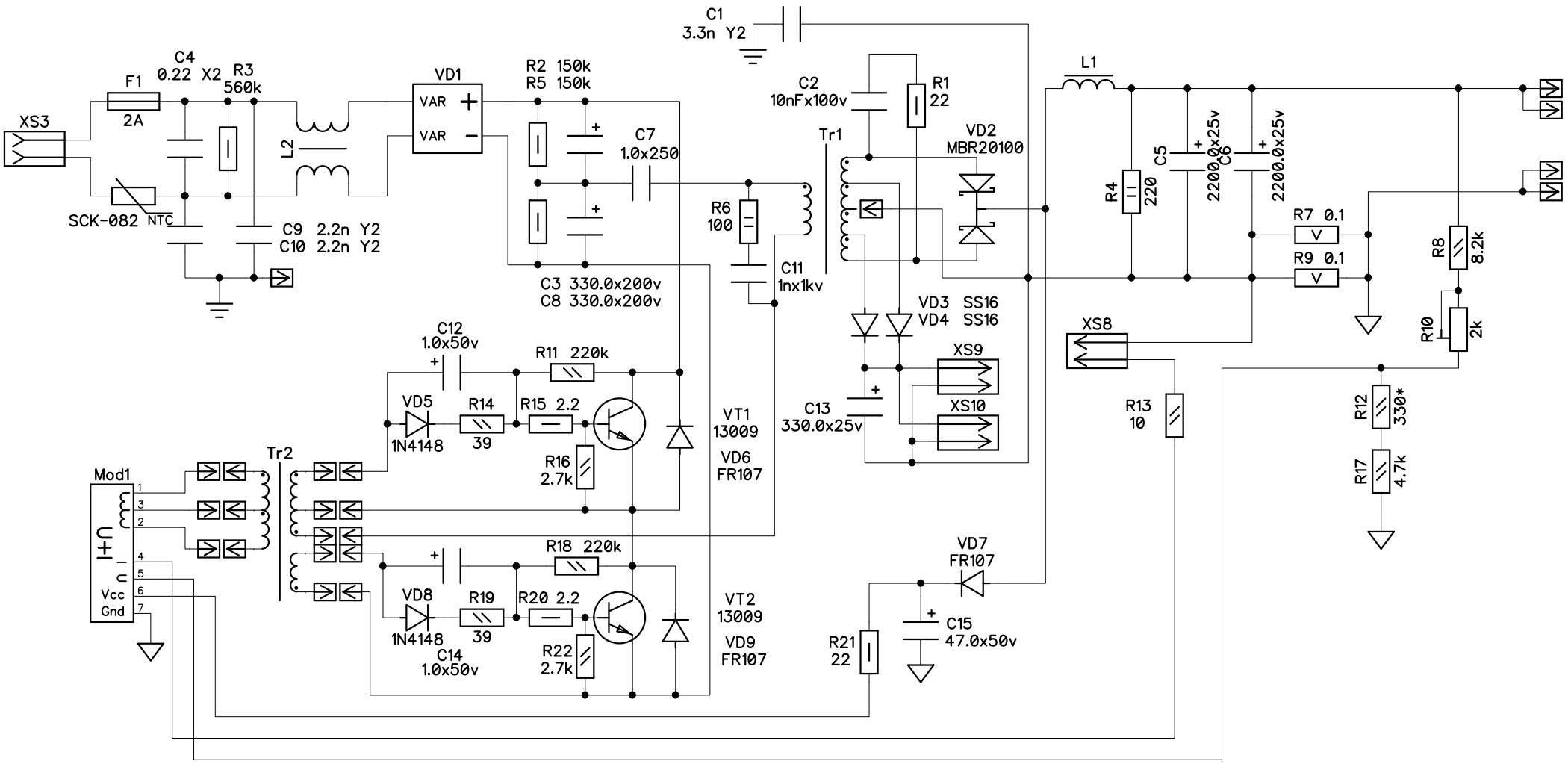
XS3
F1
2A
C4
0.22 X2
R3
560k
SCK-082 NTC
L2
C9 2.2n Y2
C10 2.2n Y2
VD1
VAR +
VAR -
R2 150k
R5 150k
C7
1.0x250
C3 330.0x200v
C8 330.0x200v
R6
100
C11
1nx1kv
C1
3.3n Y2
C2
10nFx100v
R1
22
Tr1
VD2
MBR20100
VD3 SS16
VD4 SS16
C13
330.0x25v
XS9
XS10
L1
R4
220
C5
2200.0x25v
C6
2200.0x25v
R7 0.1
R9 0.1
R8
8.2k
R10
2k
XS8
R13
10
R12
330*
R17
4.7k
C12
1.0x50v
R11 220k
VD5
1N4148
R14
39
R15 2.2
R16
2.7k
VT1
13009
VD6
FR107
Tr2
Mod1
U+
U-
Vcc
Gnd
R18 220k
VD8
1N4148
R19
39
R20 2.2
R22
2.7k
C14
1.0x50v
VT2
13009
VD9
FR107
VD7
FR107
R21
22
C15
47.0x50v