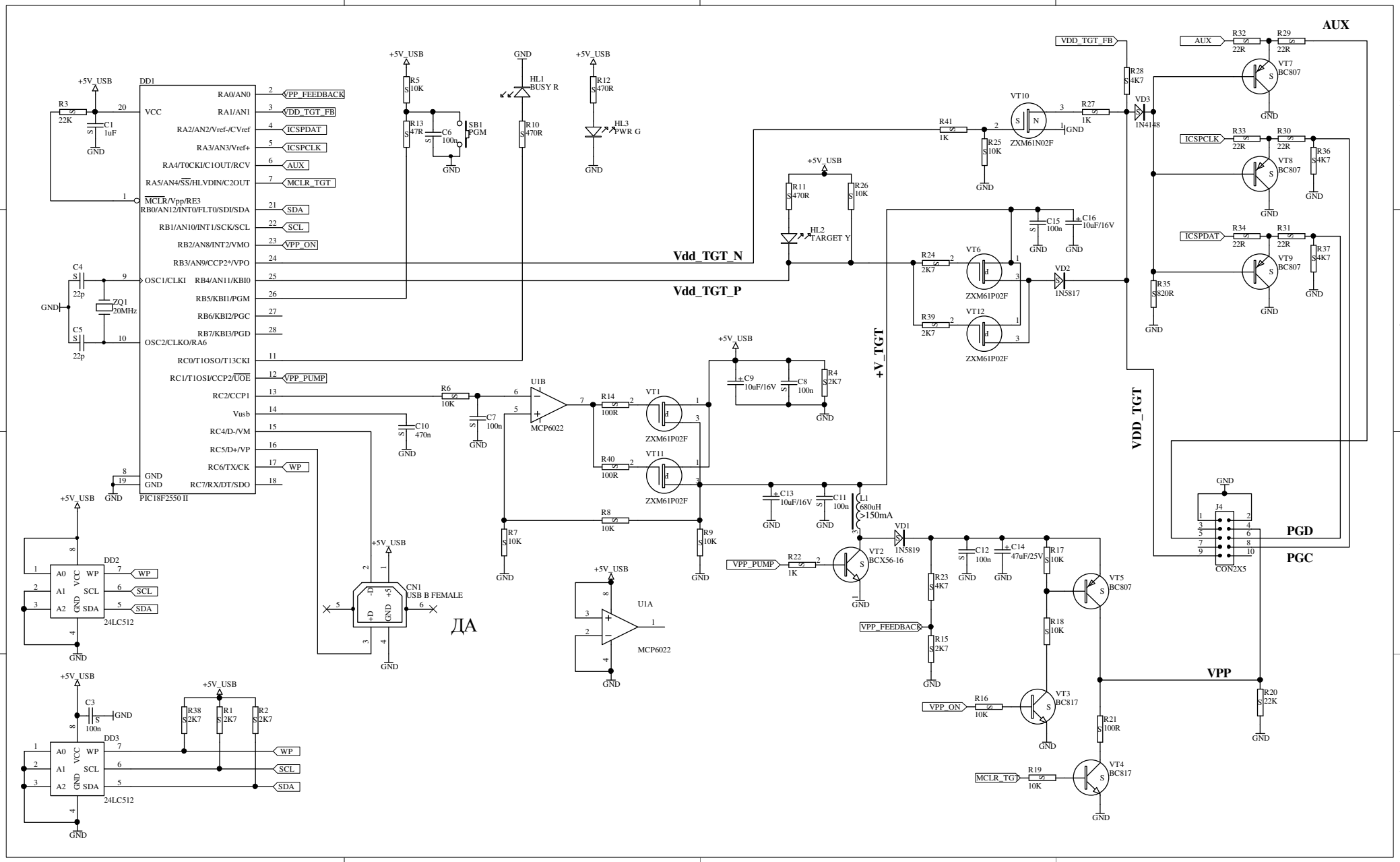
DD1
PIC18F2550 II
RA0/AN0
RA1/AN1
RA2/AN2/Vref-/CVref
RA3/AN3/Vref+
RA4/T0CKI/C1OUT/RCV
RA5/AN4/SS/HLVDIN/C2OUT
MCLR/Vpp/RE3
RB0/AN12/INT0/FLT0/SDI/SDA
RB1/AN10/INT1/SCK/SCL
RB2/AN8/INT2/VMO
RB3/AN9/CCP2*/VPO
RB4/AN11/KBI0
RB5/KBI1/PGM
RB6/KBI2/PGC
RB7/KBI3/PGD
OSC1/CLKI
OSC2/CLKO/RA6
RC0/T1OSO/T13CKI
RC1/T1OSI/CCP2/UOE
RC2/CCP1
Vusb
RC4/D-/VM
RC5/D+/VP
RC6/TX/CK
RC7/RX/DT/SDO
VCC
GND
VPP_FEEDBACK
VDD_TGT_FB
ICSPDAT
ICSPCLK
AUX
MCLR_TGT
SDA
SCL
VPP_ON
VPP_PUMP
WP
Vdd_TGT_N
Vdd_TGT_P
+V_TGT
VDD_TGT
VPP
PGD
PGC
AUX
+5V_USB
R3 22K
C1 1uF
C4 22p
C5 22p
ZQ1 20MHz
R5 10K
R13 47R
C6 100n
SB1 PGM
HL1 BUSY R
R10 470R
R12 470R
HL3 PWR G
R11 470R
R26 10K
HL2 TARGET Y
R41 1K
R25 10K
VT10 ZXM61N02F
R27 1K
R28 4K7
VD3 1N4148
R32 22R
R29 22R
VT7 BC807
R33 22R
R30 22R
R36 4K7
VT8 BC807
R34 22R
R31 22R
R37 4K7
VT9 BC807
R35 820R
C15 100n
C16 10uF/16V
R24 2K7
VT6 ZXM61P02F
VD2 1N5817
R39 2K7
VT12 ZXM61P02F
C10 470n
R6 10K
C7 100n
U1B MCP6022
R14 100R
VT1 ZXM61P02F
R40 100R
VT11 ZXM61P02F
C9 10uF/16V
C8 100n
R4 2K7
C13 10uF/16V
C11 100n
L1 680uH >150mA
VD1 1N5819
R8 10K
R7 10K
R9 10K
VPP_PUMP
R22 1K
VT2 BCX56-16
C12 100n
C14 47uF/25V
R17 10K
VT5 BC807
R23 4K7
R15 2K7
R18 10K
VPP_ON
R16 10K
VT3 BC817
R21 100R
MCLR_TGT
R19 10K
VT4 BC817
R20 22K
J4 CON2X5
DD2 24LC512
DD3 24LC512
C3 100n
R38 2K7
R1 2K7
R2 2K7
CN1 USB B FEMALE
ДА
U1A MCP6022