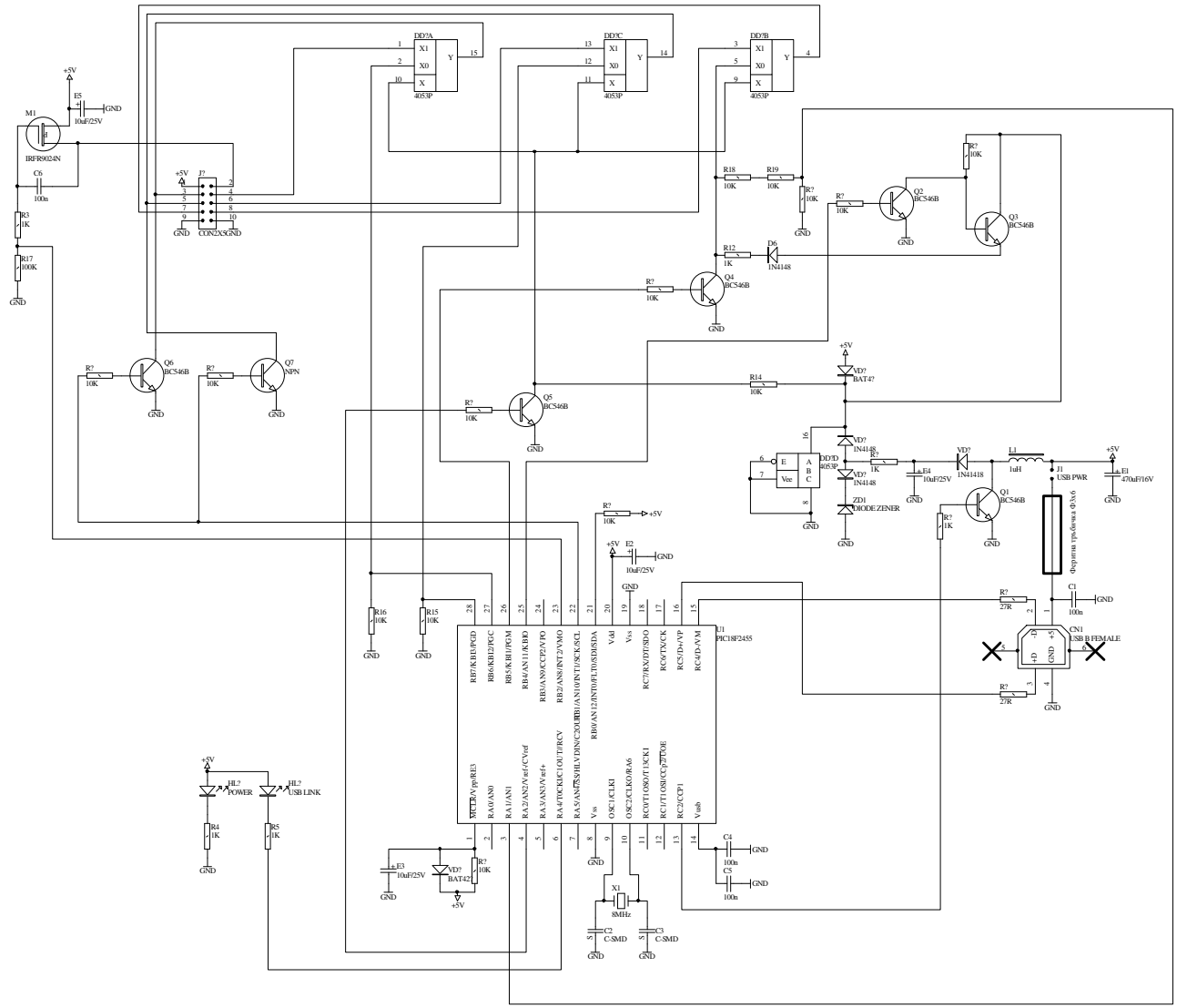


25 резистора на платката
7 диода

| | | | |
|---|---|---|---|
| Title | | | |
| Size A2 | Number | | Revision |
| Date: 15-Oct-2010 | | Sheet of | |
| File: F:\A_ISO\PICKIT2\PICFLASH\PICFLASH.SCH | | Drawn By: | |