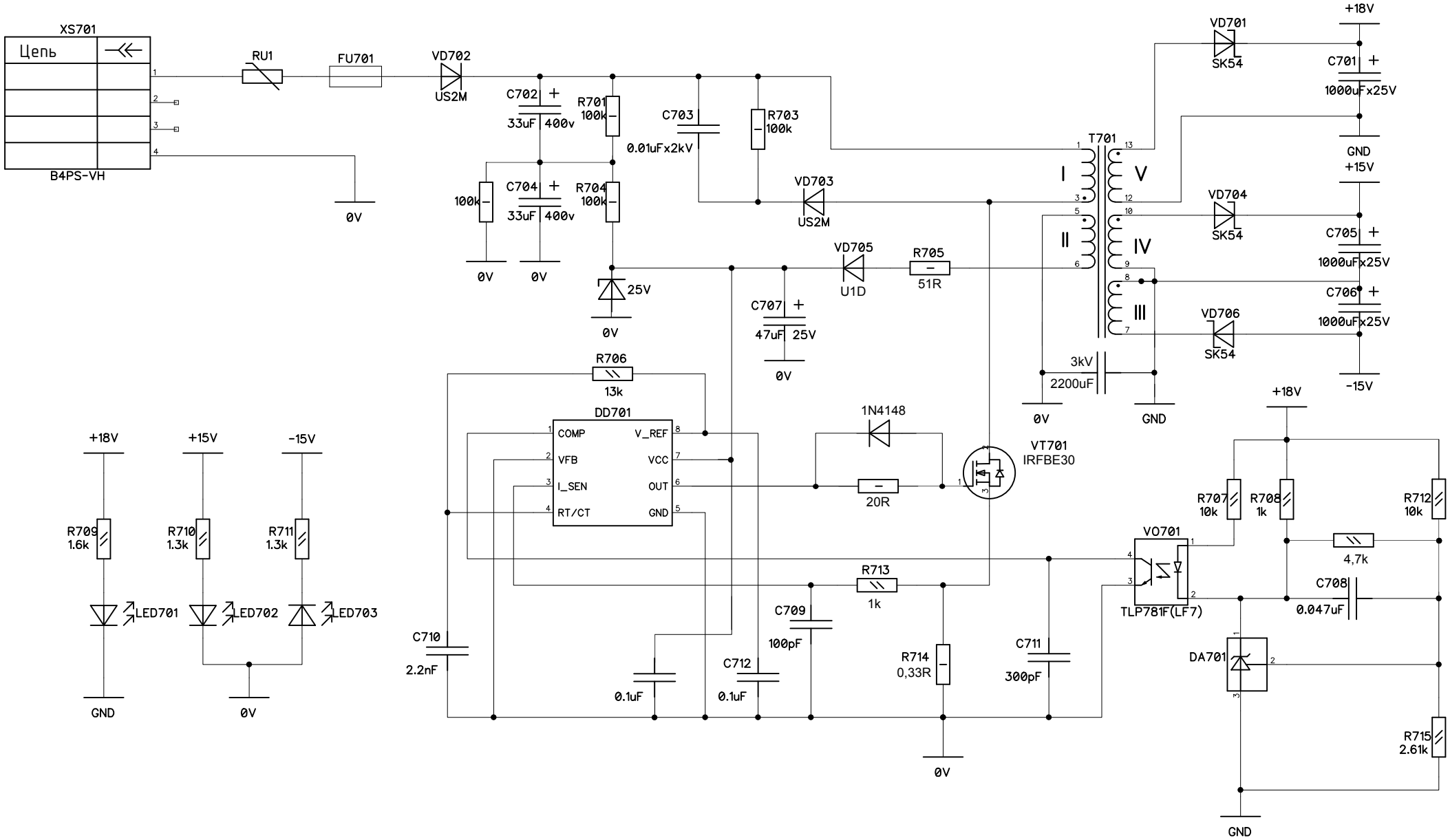
XS701
Цепь
B4PS-VH
RU1
FU701
VD702
US2M
C702
33uF 400v
R701
100k
C703
0.01uFx2kV
R703
100k
VD703
US2M
100k
C704
33uF 400v
R704
100k
0V
0V
0V
25V
0V
VD705
U1D
R705
51R
C707
47uF 25V
0V
T701
I
II
III
IV
V
VD701
SK54
VD704
SK54
VD706
SK54
+18V
C701
1000uFx25V
GND
+15V
C705
1000uFx25V
C706
1000uFx25V
-15V
3kV
2200uF
0V
GND
R706
13k
DD701
COMP
VFB
I_SEN
RT/CT
V_REF
VCC
OUT
GND
1N4148
20R
VT701
IRFBE30
R713
1k
C709
100pF
C710
2.2nF
0.1uF
C712
0.1uF
R714
0,33R
C711
300pF
0V
+18V
+15V
-15V
R709
1.6k
R710
1.3k
R711
1.3k
LED701
LED702
LED703
GND
0V
R707
10k
R708
1k
R712
10k
VO701
TLP781F(LF7)
4,7k
C708
0.047uF
DA701
R715
2.61k
GND