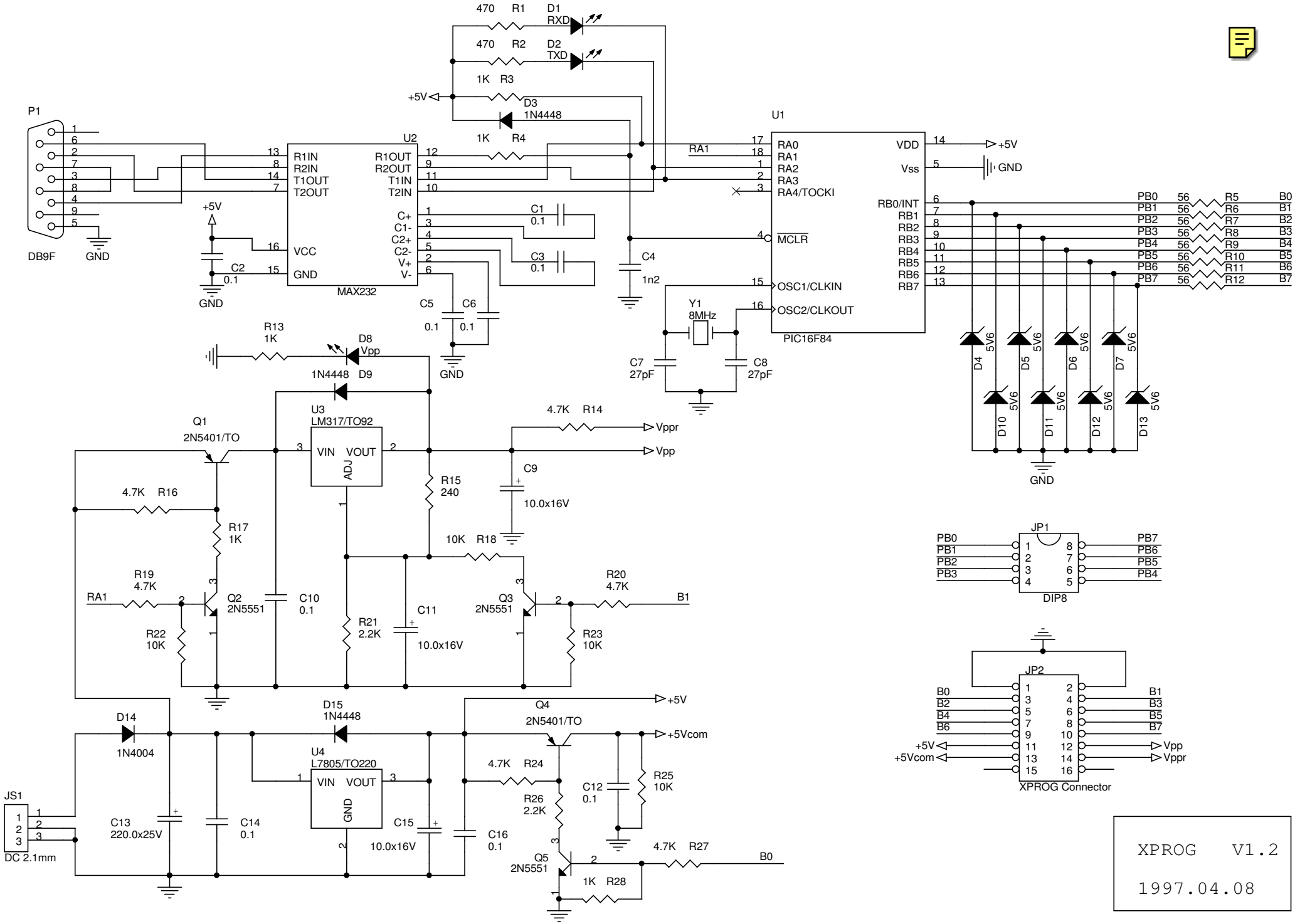
P1
DB9F
GND
U2
MAX232
R1IN
R2IN
T1OUT
T2OUT
R1OUT
R2OUT
T1IN
T2IN
C+
C1-
C2+
C2-
V+
V-
VCC
GND
+5V
C1 0.1
C2 0.1
C3 0.1
C5 0.1
C6 0.1
470 R1
470 R2
1K R3
1K R4
D1 RXD
D2 TXD
D3 1N4448
U1
PIC16F84
RA0
RA1
RA2
RA3
RA4/TOCKI
MCLR
OSC1/CLKIN
OSC2/CLKOUT
VDD
Vss
RB0/INT
RB1
RB2
RB3
RB4
RB5
RB6
RB7
C4 1n2
Y1 8MHz
C7 27pF
C8 27pF
PB0 56 R5 B0
PB1 56 R6 B1
PB2 56 R7 B2
PB3 56 R8 B3
PB4 56 R9 B4
PB5 56 R10 B5
PB6 56 R11 B6
PB7 56 R12 B7
D4 5V6
D5 5V6
D6 5V6
D7 5V6
D10 5V6
D11 5V6
D12 5V6
D13 5V6
R13 1K
D8 Vpp
1N4448 D9
U3 LM317/TO92
VIN VOUT
ADJ
Q1 2N5401/TO
4.7K R14
Vppr
Vpp
C9 10.0x16V
R15 240
4.7K R16
R17 1K
10K R18
R19 4.7K
RA1
Q2 2N5551
C10 0.1
R21 2.2K
C11 10.0x16V
Q3 2N5551
R20 4.7K
B1
R22 10K
R23 10K
JP1
DIP8
PB0
PB1
PB2
PB3
PB7
PB6
PB5
PB4
JP2
XPROG Connector
B0
B2
B4
B6
B1
B3
B5
B7
+5V
+5Vcom
Vpp
Vppr
D14 1N4004
D15 1N4448
U4 L7805/TO220
VIN VOUT
GND
Q4 2N5401/TO
+5Vcom
4.7K R24
R26 2.2K
C12 0.1
R25 10K
JS1
DC 2.1mm
C13 220.0x25V
C14 0.1
C15 10.0x16V
C16 0.1
Q5 2N5551
4.7K R27
B0
1K R28
XPROG V1.2
1997.04.08