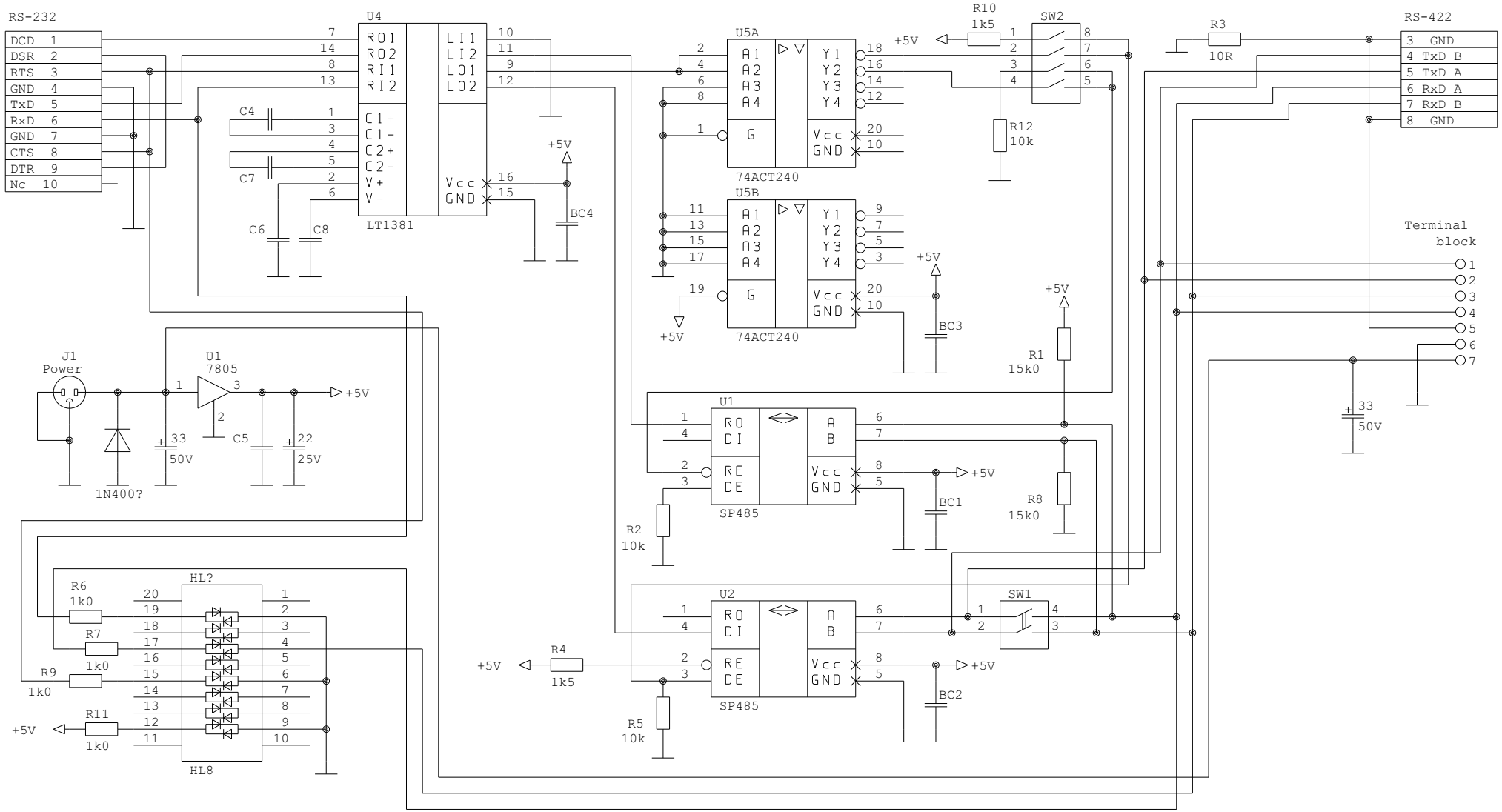

Size	Document Number	REV
A	MOXA A50 RS-232 to RS-422 converter	1.0
Date: July 3, 2001	Sheet of	