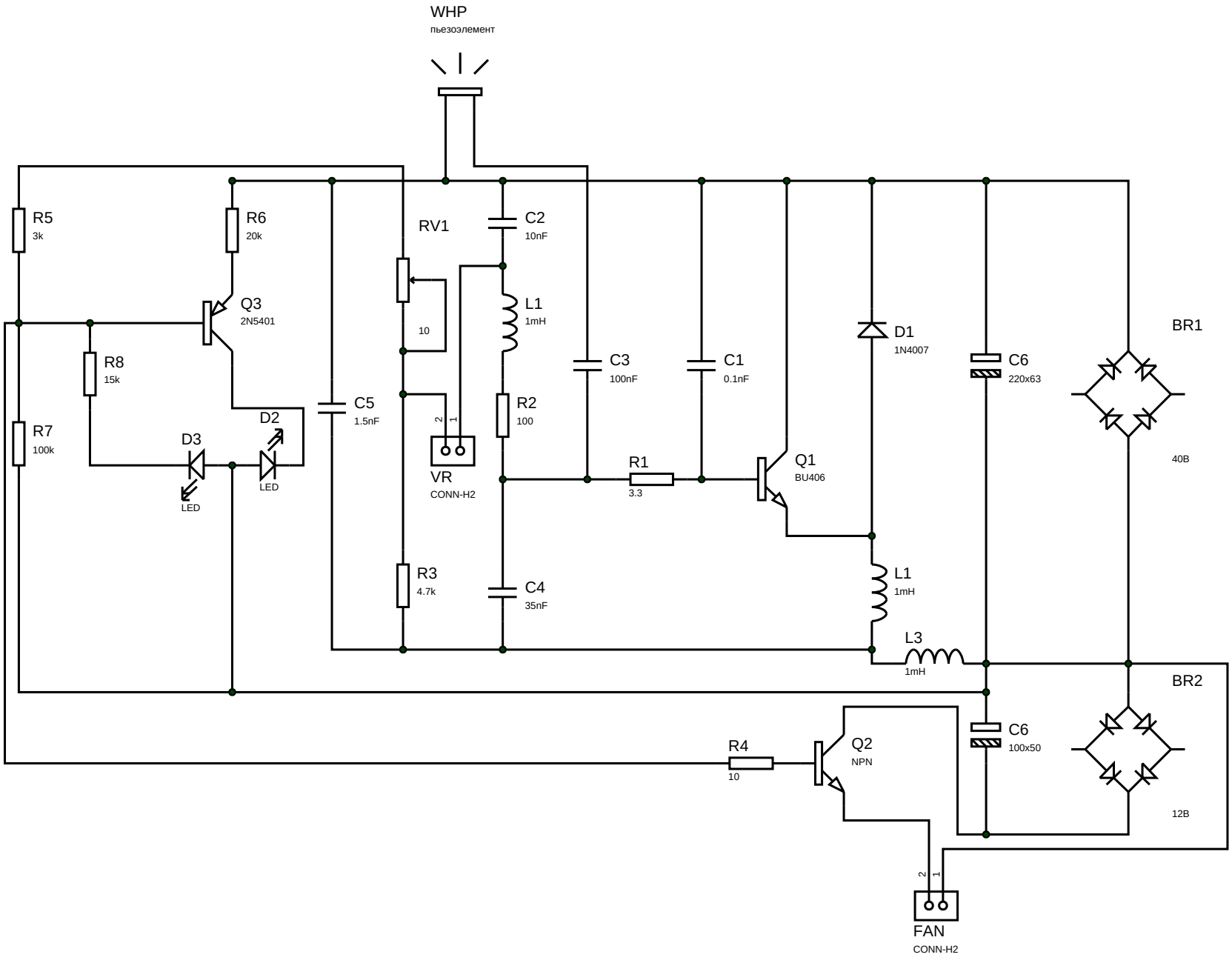
WHP
пьезоэлемент
R5
3k
R6
20k
Q3
2N5401
R8
15k
R7
100k
D3
LED
D2
LED
C5
1.5nF
RV1
10
VR
CONN-H2
R3
4.7k
C2
10nF
L1
1mH
R2
100
C4
35nF
C3
100nF
R1
3.3
C1
0.1nF
Q1
BU406
D1
1N4007
L1
1mH
L3
1mH
C6
220x63
BR1
40В
BR2
C6
100x50
12В
R4
10
Q2
NPN
FAN
CONN-H2