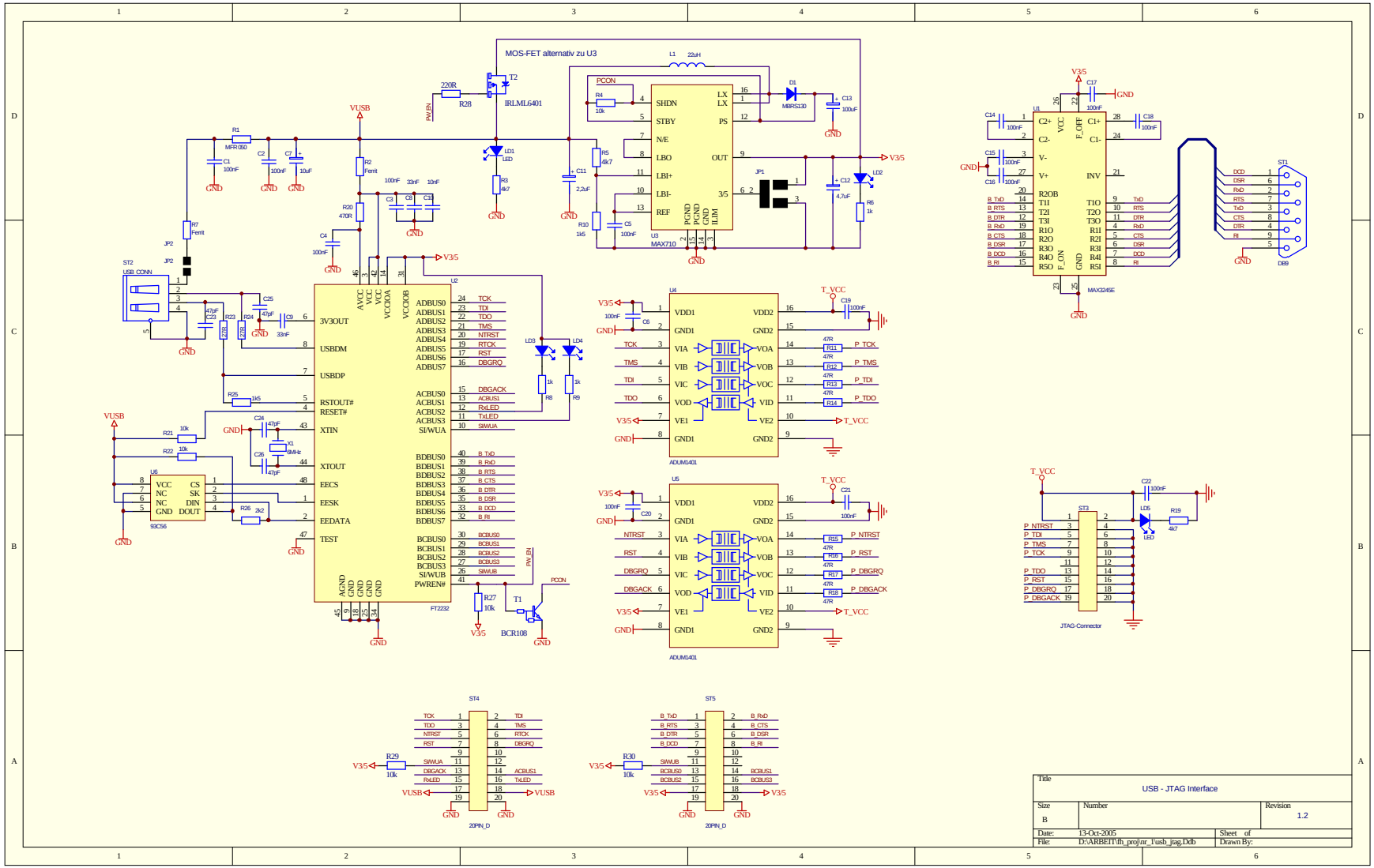
MOS-FET alternativ zu U3
IRLML6401
MBRS130
MAX710
MAX3245E
FT2232
ADUM1401
93C56
USB_CONN
DB9
JTAG-Connector
20PIN_D
BCR108
Title
USB - JTAG Interface
Size
B
Number
Revision
1.2
Date:
13-Oct-2005
Sheet of
File:
D:\ARBEIT\th_proj\nr_1\usb_jtag.Ddb
Drawn By: