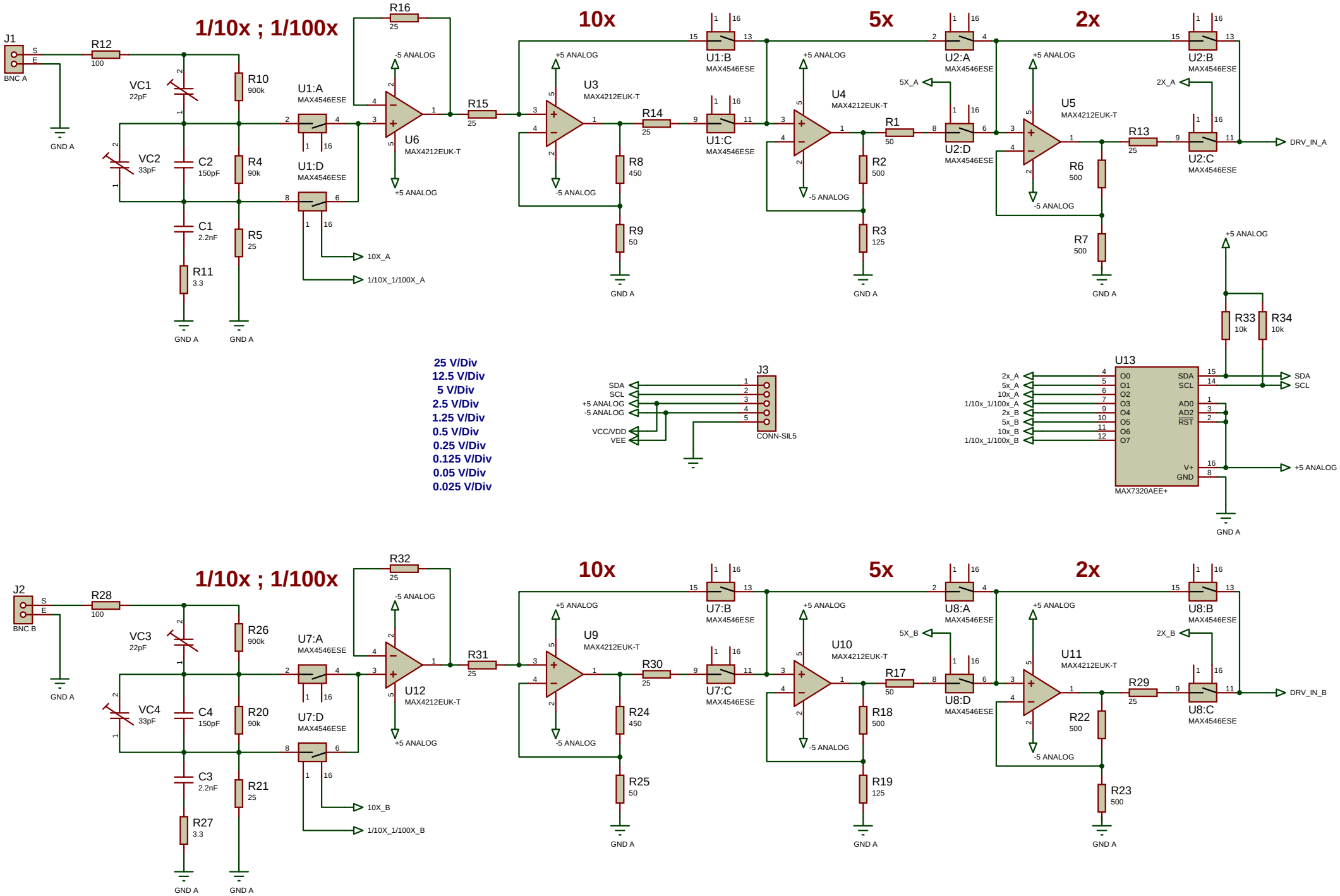
1/10x ; 1/100x
10x
5x
2x
J1
BNC A
R12
100
VC1
22pF
VC2
33pF
C2
150pF
C1
2.2nF
R11
3.3
R10
900k
R4
90k
R5
25
GND A
U1:A
MAX4546ESE
U1:D
MAX4546ESE
R16
25
U6
MAX4212EUK-T
-5 ANALOG
+5 ANALOG
10X_A
1/10X_1/100X_A
R15
25
U3
MAX4212EUK-T
R14
25
R8
450
R9
50
U1:B
MAX4546ESE
U1:C
MAX4546ESE
U4
MAX4212EUK-T
R1
50
R2
500
R3
125
5X_A
U2:A
MAX4546ESE
U2:D
MAX4546ESE
U5
MAX4212EUK-T
R13
25
R6
500
R7
500
2X_A
U2:B
MAX4546ESE
U2:C
MAX4546ESE
DRV_IN_A
R33
10k
R34
10k
25 V/Div
12.5 V/Div
5 V/Div
2.5 V/Div
1.25 V/Div
0.5 V/Div
0.25 V/Div
0.125 V/Div
0.05 V/Div
0.025 V/Div
J3
CONN-SIL5
SDA
SCL
+5 ANALOG
-5 ANALOG
VCC/VDD
VEE
U13
MAX7320AEE+
2x_A
5x_A
10x_A
1/10x_1/100x_A
2x_B
5x_B
10x_B
1/10x_1/100x_B
O0
O1
O2
O3
O4
O5
O6
O7
AD0
AD2
RST
V+
GND
J2
BNC B
R28
100
VC3
22pF
VC4
33pF
C4
150pF
C3
2.2nF
R27
3.3
R26
900k
R20
90k
R21
25
U7:A
MAX4546ESE
U7:D
MAX4546ESE
R32
25
U12
MAX4212EUK-T
10X_B
1/10X_1/100X_B
R31
25
U9
MAX4212EUK-T
R30
25
R24
450
R25
50
U7:B
MAX4546ESE
U7:C
MAX4546ESE
U10
MAX4212EUK-T
R17
50
R18
500
R19
125
5X_B
U8:A
MAX4546ESE
U8:D
MAX4546ESE
U11
MAX4212EUK-T
R29
25
R22
500
R23
500
2X_B
U8:B
MAX4546ESE
U8:C
MAX4546ESE
DRV_IN_B