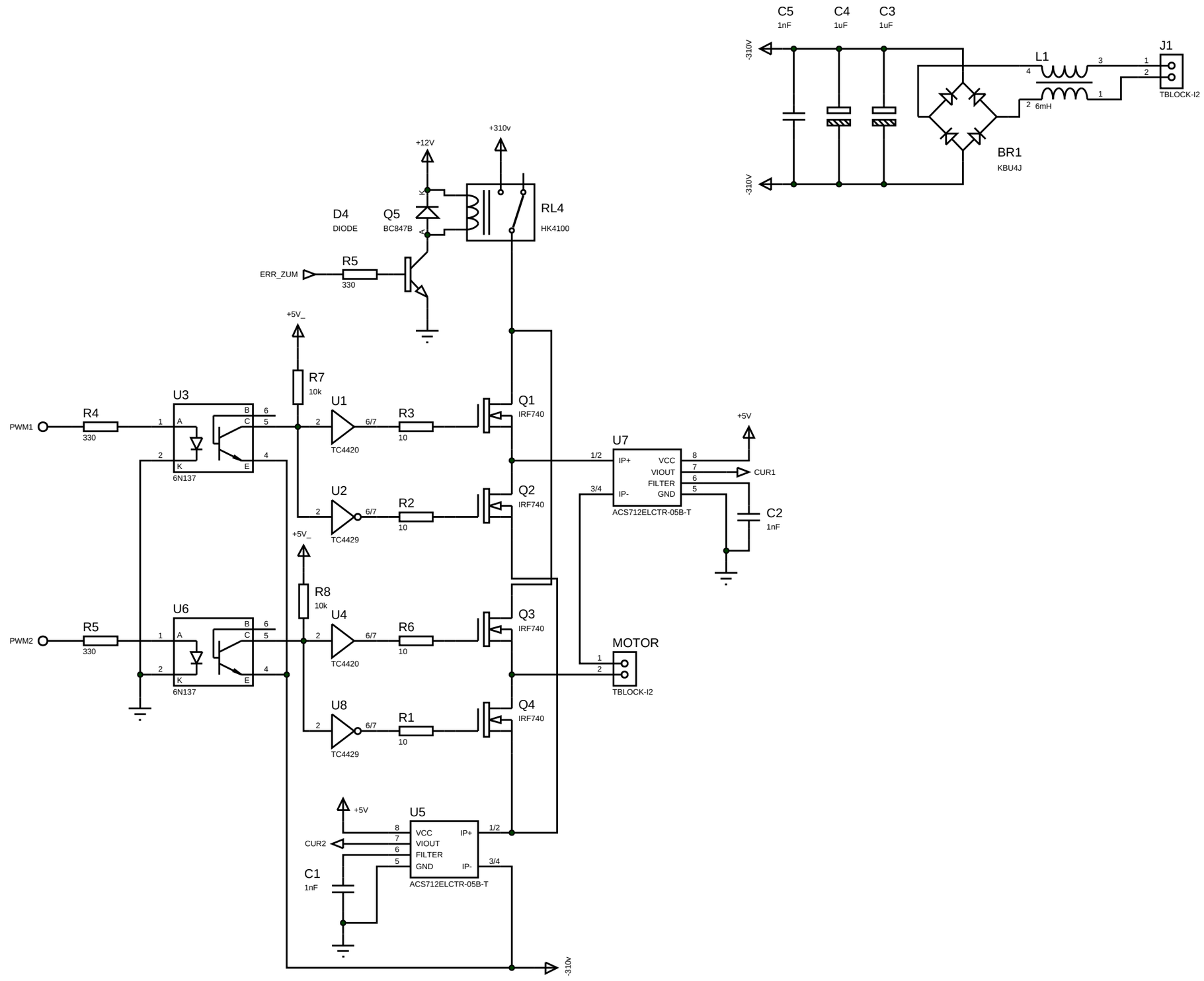
C5
1nF
C4
1uF
C3
1uF
-310V
-310V
L1
6mH
J1
TBLOCK-I2
BR1
KBU4J
+310v
+12V
D4
DIODE
Q5
BC847B
RL4
HK4100
ERR_ZUM
R5
330
+5V_
R7
10k
U3
6N137
PWM1
R4
330
U1
TC4420
R3
10
Q1
IRF740
U7
ACS712ELCTR-05B-T
+5V
CUR1
C2
1nF
U2
TC4429
R2
10
Q2
IRF740
+5V_
R8
10k
U6
6N137
PWM2
R5
330
U4
TC4420
R6
10
Q3
IRF740
MOTOR
TBLOCK-I2
U8
TC4429
R1
10
Q4
IRF740
+5V
U5
ACS712ELCTR-05B-T
CUR2
C1
1nF
-310v