Interfacing OLED Display to the AT89LV52 MCU

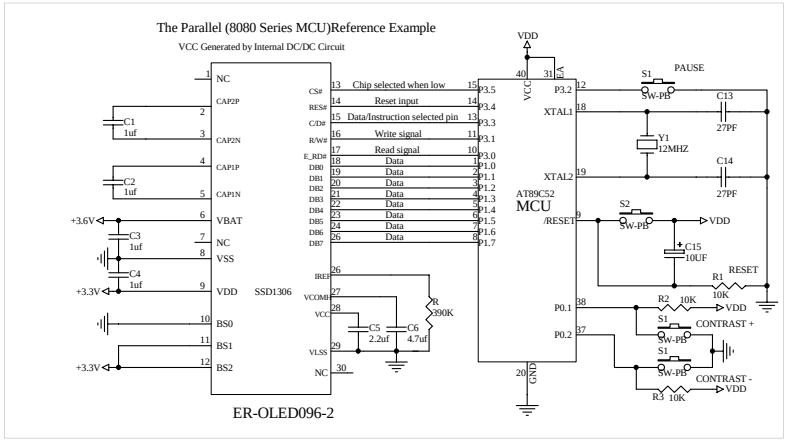

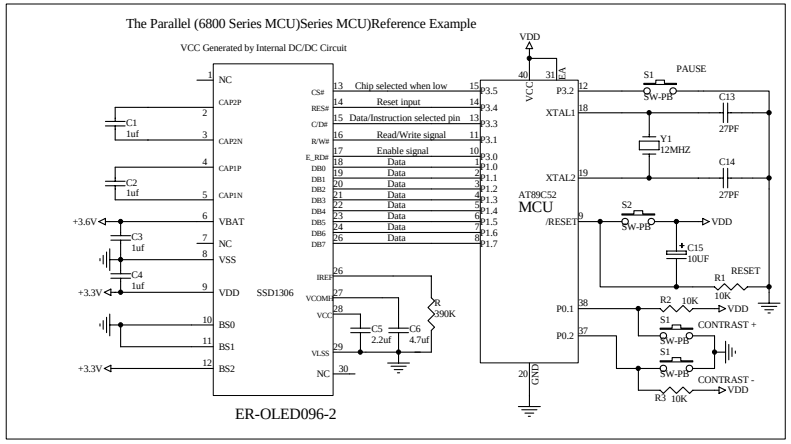

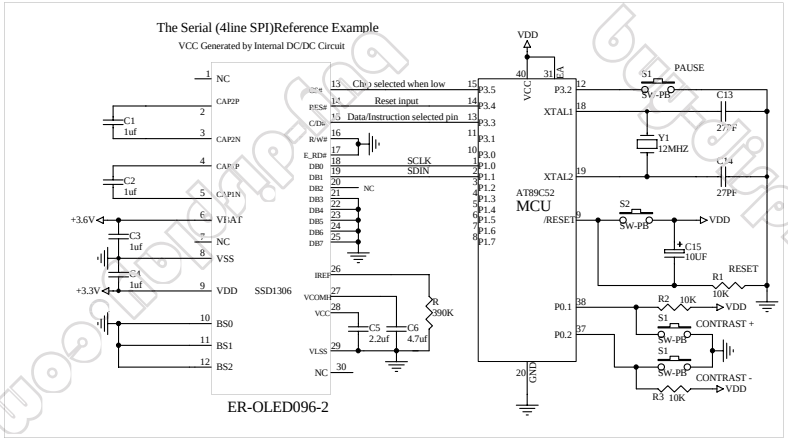

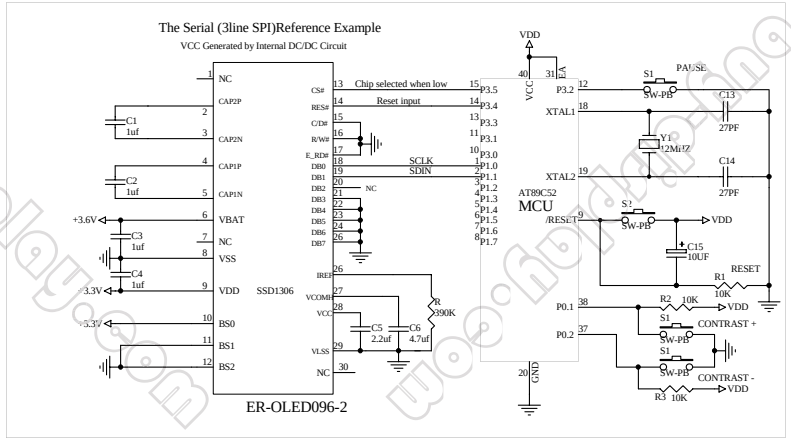

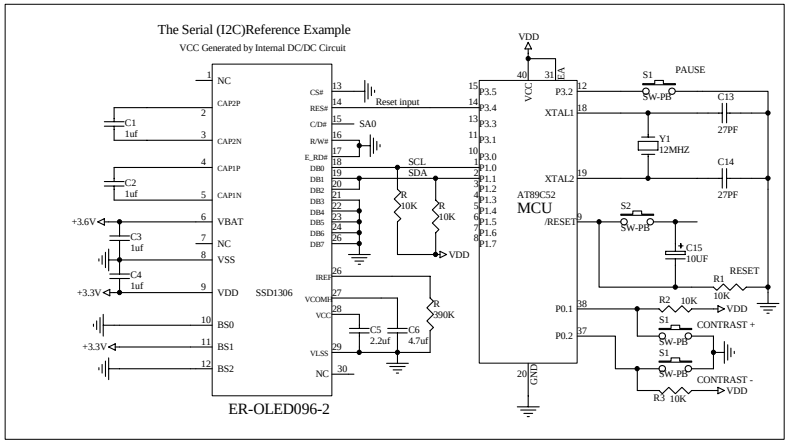

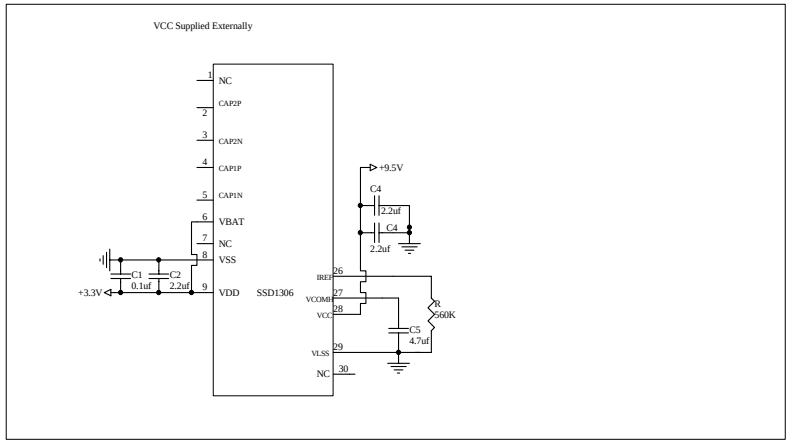

EastRising
buy-display.com

Title	EASTRISING TECHNOLOGY CO.,LTD.		
Size A	Number ER-OLED096-3		Revision A0
Date: 03-Feb-2010		Sheet of 1	
File		Drawn By Javen	