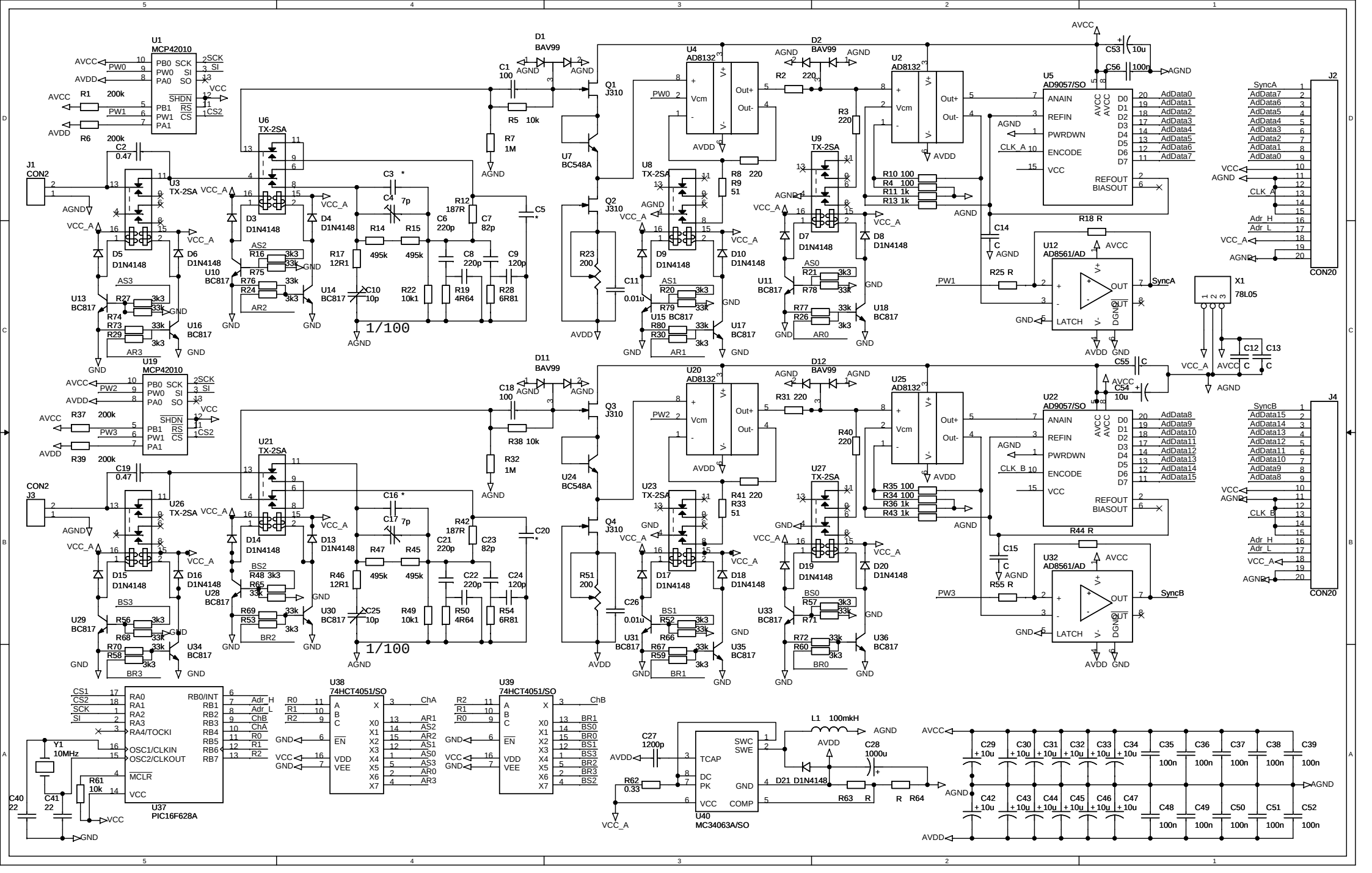
U1 MCP42010
U19 MCP42010
U2 AD8132
U4 AD8132
U20 AD8132
U25 AD8132
U5 AD9057/SO
U22 AD9057/SO
U12 AD8561/AD
U32 AD8561/AD
U6 TX-2SA
U21 TX-2SA
U37 PIC16F628A
U38 74HCT4051/SO
U39 74HCT4051/SO
U40 MC34063A/SO
J1 CON2
J3 CON2
J2 CON20
J4 CON20
X1 78L05
Y1 10MHz
L1 100mkH
1/100
1/100