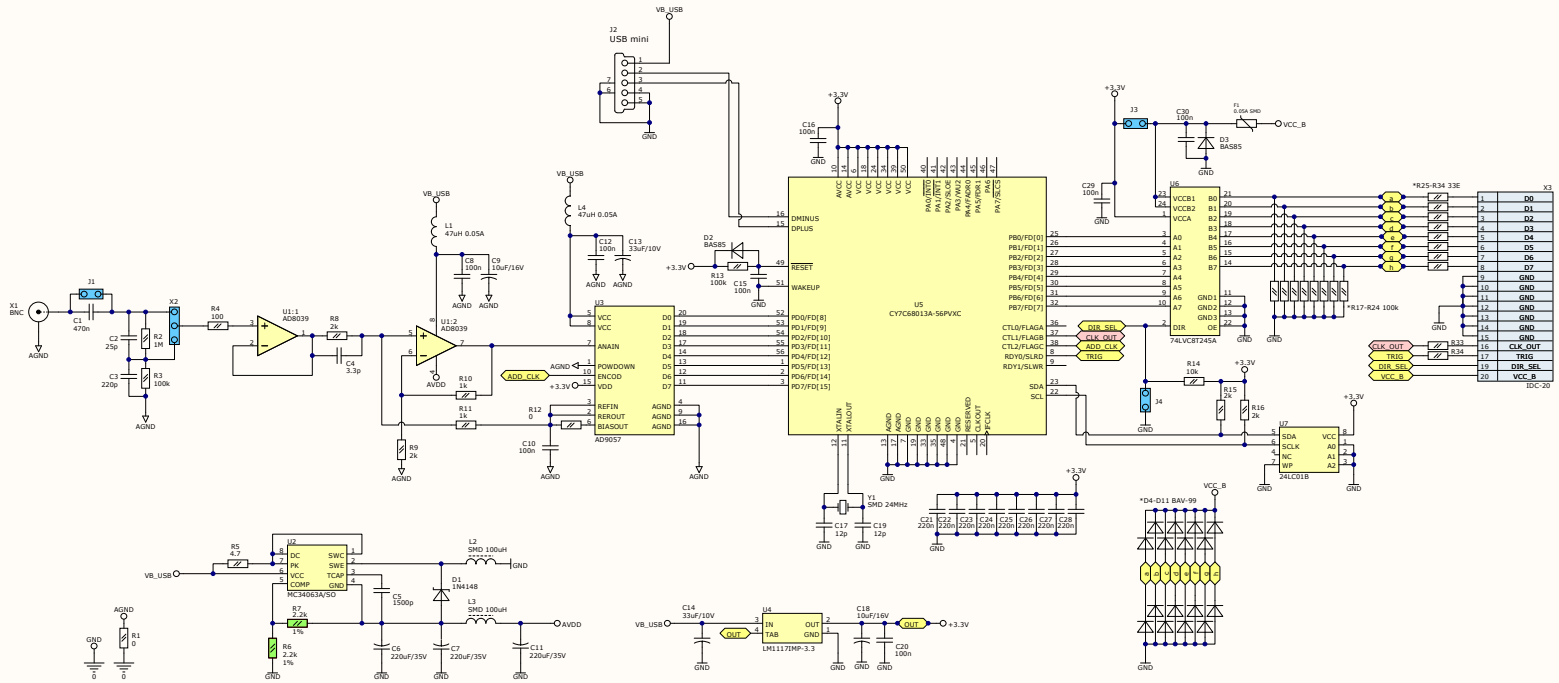

Title			
Size A2	Number		Revision
Date: 16.07.2010		Sheet of	
File: C:\Orion\LOGIC-U\Sheet1.SchDoc		Drawn By:	