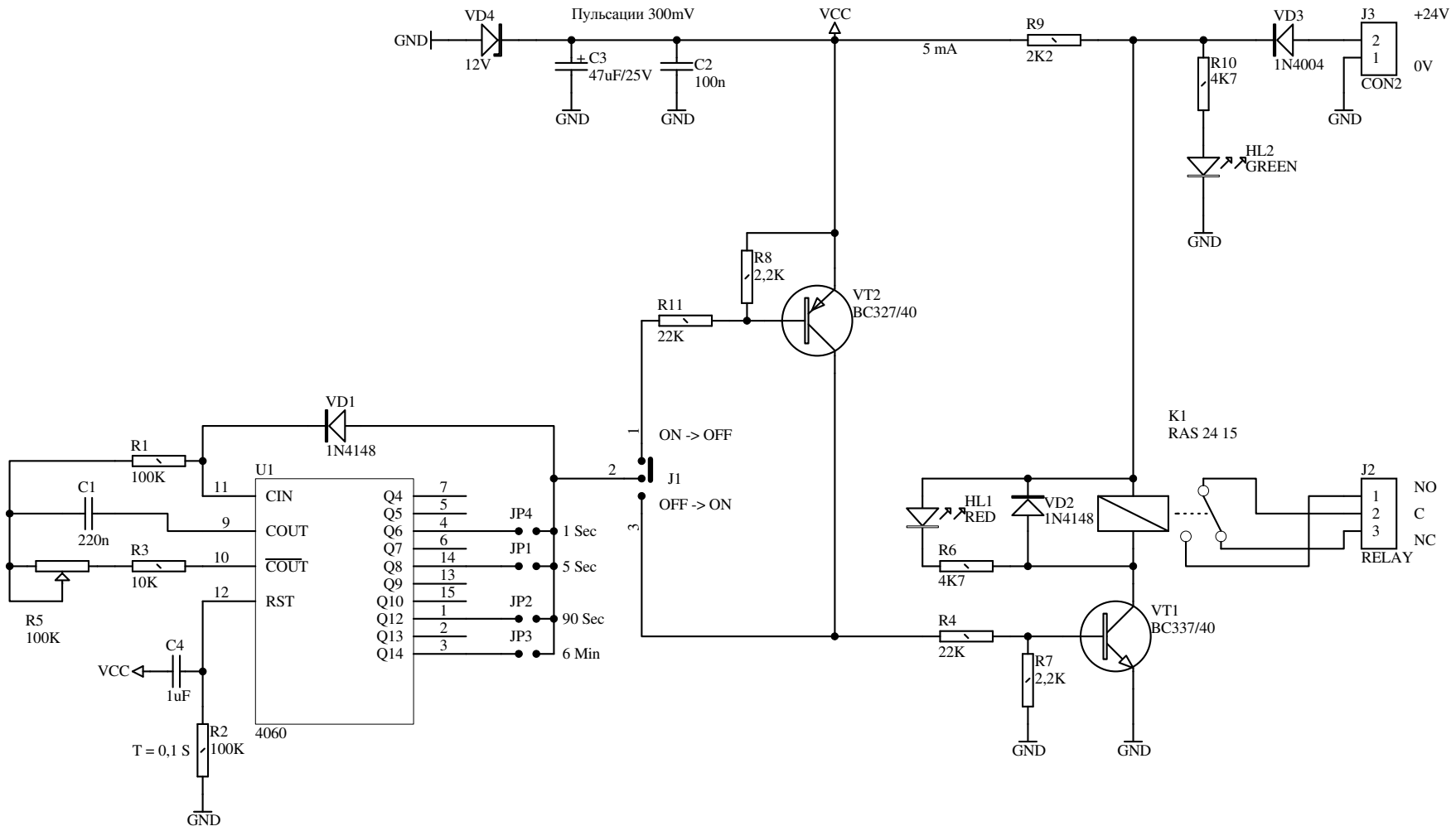
GND
VD4
12V
Пульсации 300mV
C3
47uF/25V
C2
100n
VCC
5 mA
R9
2K2
VD3
1N4004
J3
+24V
0V
CON2
R10
4K7
HL2
GREEN
R8
2,2K
VT2
BC327/40
R11
22K
VD1
1N4148
R1
100K
U1
CIN
COUT
RST
4060
C1
220n
R3
10K
R5
100K
C4
1uF
R2
100K
T = 0,1 S
JP4
JP1
JP2
JP3
1 Sec
5 Sec
90 Sec
6 Min
ON -> OFF
J1
OFF -> ON
K1
RAS 24 15
HL1
RED
VD2
1N4148
R6
4K7
R4
22K
R7
2,2K
VT1
BC337/40
J2
NO
C
NC
RELAY